aerospace

MDPI

Article

Enhancement of Solar Array Drive Assembly System Stability through Linear Active Disturbance Rejection Control

Jianyuan Wang [1,2,*], Shiyue Gan [1,2], Jinbao Chen [1,2], Jian Wang [1,2] and Zhuochen Hu [1,2]

[1] College of Astronautics, Nanjing University of Aeronautics and Astronautics, Nanjing 211106, China; ganshiyue@nuaa.edu.cn (S.G.); chenjbao@nuaa.edu.cn (J.C.); BX2315004@nuaa.edu.cn (J.W.); zhuochenhu@nuaa.edu.cn (Z.H.)

[2] National Key Laboratory of Aerospace Mechanism, Nanjing University of Aeronautics and Astronautics, Nanjing 211106, China

* Correspondence: wangjyuan@nuaa.edu.cn

Abstract: To improve the Solar Array Drive Assembly (SADA) system, a servo control method known as Linear Active Disturbance Rejection Control (LADRC) is introduced, utilizing a speed loop for a Permanent Magnet Synchronous Motor (PMSM). This method serves as an alternative to the conventional proportional–integral (PI) controller, which exhibits a limited stability margin. The use of the LADRC controller leads to decreased overshoot and enhances the system's robustness against disturbances. First, the mathematical representation of the PMSM alongside the dynamic model of the solar wing is established. Following that, the application of the Lyapunov stability theory is employed to illustrate the stability of the drive system utilizing LADRC, thereby validating the stability of the SADA. Lastly, simulation experiments are performed using the MATLAB2021a/Simulink digital environment. The simulation results under various operational conditions indicate the significant improvement in stability compared to the PI controller, achieving the stability level of 9.603×10^{-5}, demonstrates enhanced performance in terms of speed and resistance to disturbances.

Keywords: solar array drive system; permanent magnet synchronous motor; linear active disturbance rejection control; speed stability

check for updates

Citation: Wang, J.; Gan, S.; Chen, J.; Wang, J.; Hu, Z. Enhancement of Solar Array Drive Assembly System Stability through Linear Active Disturbance Rejection Control. *Aerospace* **2024**, *11*, 751. https://doi.org/10.3390/aerospace11090751

Academic Editor: Vladimir S. Aslanov

Received: 13 August 2024
Revised: 10 September 2024
Accepted: 11 September 2024
Published: 13 September 2024

Copyright: © 2024 by the authors. Licensee MDPI, Basel, Switzerland. This article is an open access article distributed under the terms and conditions of the Creative Commons Attribution (CC BY) license (https://creativecommons.org/licenses/by/4.0/).

1. Introduction

As spacecraft in different nations develop into larger, more flexible designs with reduced stiffness, the energy requirements for next-generation spacecraft are increasingly growing. This leads to a need for larger solar wings to ensure adequate energy provision [1]. Nevertheless, the low stiffness and weak damping characteristics of the solar wing render the Solar Array Drive Assembly (SADA) vulnerable to vibrations caused by external factors, which can compromise system control precision and may result in instability [2,3]. To maintain smooth rotation of the solar wing at slow speeds, it is essential to establish stricter stability criteria for the SADA.

To address the challenge of stable drive control systems for solar wings, researchers from both domestic and international backgrounds have undertaken thorough investigations. They have proposed a range of algorithms, including sliding mode control (SMC), adaptive control (AC), phase compensation, and active disturbance rejection control (ADRC), aimed at improving both the dynamic and static aspects of the system.

In the realm of SMC, Xie et al. [4] introduced a novel time-varying balance matrix that enables more flexible adjustments of the positive and negative terms across various monomials. Consequently, the conditions for violating the instant alarm threshold become more stringent, thereby further reducing the conservatism associated with elastic fuzzy stability. Meanwhile, the control strategy proposed by García-Chávez et al. [5] employs multiple proportional–integral loops alongside sliding mode controllers, demonstrating high robustness and effectively addressing the challenges associated with utilizing a DC/DC buck

converter–inverter for bidirectional speed control of amplifier-fed DC motors. Cao et al. [6] applied sliding mode control in combination with input shaping techniques to create a collaborative compensation strategy that effectively reduces system vibrations while improving the stability of solar wing drive mechanisms. Ji et al. [7] developed a dynamic model of the SADA system and proposed a disturbance compensation sliding mode control (DCSMC) strategy aimed at achieving speed smoothing and vibration suppression. The simulation results indicate that the SADA system utilizing the DCSMC strategy outperforms traditional proportional–integral (PI) control and SMC systems. Zhao et al. [8] presented an innovative nonlinear fast terminal sliding mode servo control method that incorporates motion planning and vibration damping techniques, aiming to improve the driving speed stability of solar cell wings. However, the application of sliding mode control can lead to discontinuous switching adjustments, which may result in system chattering.

In the realm of AC, Rubio et al. [9] employed a genetic high-gain controller to enhance position disturbance attenuation while simultaneously improving the speed disturbance attenuation of the inverted pendulum through a compact high-gain controller. This approach effectively increases the degree of attenuation for both position and velocity disturbances of the inverted pendulum. Qiu et al. [10] investigated the adaptive fuzzy finite control time problem for strict feedback nonlinear systems utilizing disturbance observers, demonstrating that the closed-loop system is semi-global and indeed finite-time stable. Additionally, de Jesús Rubio et al. [11] introduced an observer-based differential evolution constraint control method aimed at ensuring the robustness and stability of the observer-based constraint control, thereby achieving safe reference tracking for the robot. Furthermore, Rubio et al. [12] proposed a control method grounded in an improved bat algorithm, which is used to determine the optimal control gain, consequently enhancing the trajectory tracking accuracy of the robot. To address the solar tracking challenges of flexible spacecraft amid internal and external disturbances, Yew-Chung Chark et al. [13] proposed a novel control scheme based on the adaptive fuzzy Jacobian method. However, adaptive control also presents certain shortcomings. The development of the system model and the design of the parameter estimator can be relatively complex and demand high real-time performance.

In the context of phase compensation control, Guo et al. [14] utilized phase compensation alongside a proportional–integral (PI) control approach to realize high stability in the control of high-resolution satellite-driven solar wings. Cheng et al. [15] advanced the flexible vibration management of the solar cell array by employing a permanent magnet synchronous motor (PMSM) as the driving force. Building on this work, they proposed a composite control strategy that combines a lead-lag network with adaptive fuzzy control, significantly improving the performance of the SADA system in terms of speed stability and dynamic response. Cheng et al. [16] proposed a control method that merges T-S fuzzy control with a correction network to reduce system overshoot, thus enhancing both speed accuracy and overall stability.

In the context of ADRC, Wang et al. [17] employed ADRC in place of a proportional–integral (PI) controller for the design of the speed loop. Compared to the PI controller, the ADRC demonstrates enhanced robustness. However, the incorporation of nonlinear functions and the necessity for extensive parameter tuning pose challenges to the stability of ADRC, thereby limiting its further development.

In recent years, Linear Active Disturbance Rejection Control (LADRC) has become a prominent approach for improving the stability of SADA systems. Professor Gao Zhiqiang linearized the ADRC method and introduced the LADRC strategy. Furthermore, he simplified the parameter adjustment process for LADRC by transforming the selection of controller bandwidth and observer bandwidth into design parameters [18]. This success is due to its resilience in managing variations in internal parameters and external disturbances, its ability to provide high-precision control, and its reduced number of adjustable parameters. Consequently, LADRC has attracted growing interest [19]. For example, Si et al. [20] implemented an active disturbance rejection controller to assess and counter the disruptions resulting from the sailboard drive and system uncertainties. This intervention notably

boosted system stability and increased the precision of the sailboard's 104 alignment with the sun. Li et al. [21] investigated the application of the LADRC theory in the control of permanent magnet synchronous motor servo systems. By designing the LADRC controller for the current, speed, and position loops, and comparing its performance with that of the PI controller, they found that the LADRC servo system exhibits excellent dynamic and steady-state performance, robust anti-interference capabilities, and straightforward parameter adjustment. Similarly, Riccardo et al. [22] proposed an adaptive LADRC controller based on fuzzy reasoning for high-speed permanent magnet synchronous motors, which can dynamically adjust the Linear Extended State Observer (LESO) bandwidth and respond more rapidly to model uncertainties and external disturbances.

LADRC is a control approach based on bandwidth, originating from nonlinear ADRC. Its purpose is to overcome the limitations of conventional PI control, which is vulnerable to fluctuations in motor parameters and lacks robustness against interference. On one hand, the discontinuous switching of the SMC can easily lead to high-frequency chatter within the system, which significantly restricts the application of SMC. On the other hand, AC is highly reliant on the accurate identification or estimation of time-varying model parameters. This technique incorporates the fundamental principles of ADRC, linearizes the extended state observer to reduce gain and bandwidth, and estimates and compensates for disturbances in real time. Furthermore, it streamlines the tuning parameters and enhances resistance to interference [23].

This research addresses the problem of highly stable servo control for sun tracking in solar panels. It specifically explores the application of PMSM as the power source and presents an approach utilizing LADRC. The evaluation of the LADRC controller's stability is carried out through the Lyapunov theory. Through comparisons and simulations against conventional PI control methods, this paper illustrates the effectiveness and practicality of the suggested LADRC control strategy, resulting in a marked enhancement of speed stability within the solar panel sun tracking system.

2. Model of SADA Driving System

The solar wing drive device comprises two primary structural components: the actuator and the flexible solar wing. The SADA serves as the crucial link between the solar array and the satellite structure, enabling precise rotation of the solar array [24]. When the solar array faces the sun directly, the SADA transitions into tracking mode, causing the solar array to rotate slowly, with an angular velocity appropriate 0.065°/s for sun-synchronous orbit satellites [25].

At the core of the SADA lies the motor, which is specifically the PMSM chosen for its ability to minimize disturbances in the drive system. This motor serves as the driving force for the solar array, ensuring smooth and efficient operation. An encoder is utilized to measure the angle and calculate the rotational speed, while a high-precision current sampling circuit samples the motor current at a rapid pace to enable dual closed-loop control of both speed and current. The operational principle of the SADA drive system is illustrated in Figure 1.

The entire control system utilizes the speed loop based on LADRC and the current loop employing the PI control strategy. The current control scheme is set to $i_{d_ref} = 0$. The inner loop primarily focuses on tracking performance and consists of two current loops: the q-axis current loop, which controls torque, and the d-axis current loop, which mitigates the effect of stator current on motor flux linkage, ensuring that the flux linkage is solely generated by the rotor's permanent magnets. In contrast, the outer loop, represented by the speed loop, emphasizes interference immunity, allowing the motor speed to accurately follow the specified input. The control process begins with a photoelectric encoder measuring the rotor's position and speed information, which the controller then uses to calculate the rotor position θ and speed ω_m. The current and voltage detection unit measures the three-phase currents i_A, i_B, i_C of the motor stator. The controller transforms these measurements from the three-phase static coordinate system ABC into rotating vectors i_α, i_β and subsequently

into the rotating coordinate system dq, ensuring synchronous rotation between the direct axis and the quadrature axis currents (i_d and i_q). The specified speed ω_r^* is compared with the actual motor speed ω_m after speed conversion, yielding the required q-axis current i_{q_ref} via the LADRC controller. The specified currents i_{d_ref}, i_{q_ref} are then compared with the motor's direct-quadrature (d–q) axis currents i_d, i_q, producing the necessary d–q axis voltages U_d, U_q through the PI controller. These voltages are converted U_α, U_β using inverse Park transformation. Finally, voltage space vector pulse width modulation (SVPWM) technology is employed to convert U_α, U_β into three-phase voltages U_A, U_B, U_C, which drive the motor. The load component of the system is the solar panel, with the motor generating torque T_L to facilitate the panel's rotation.

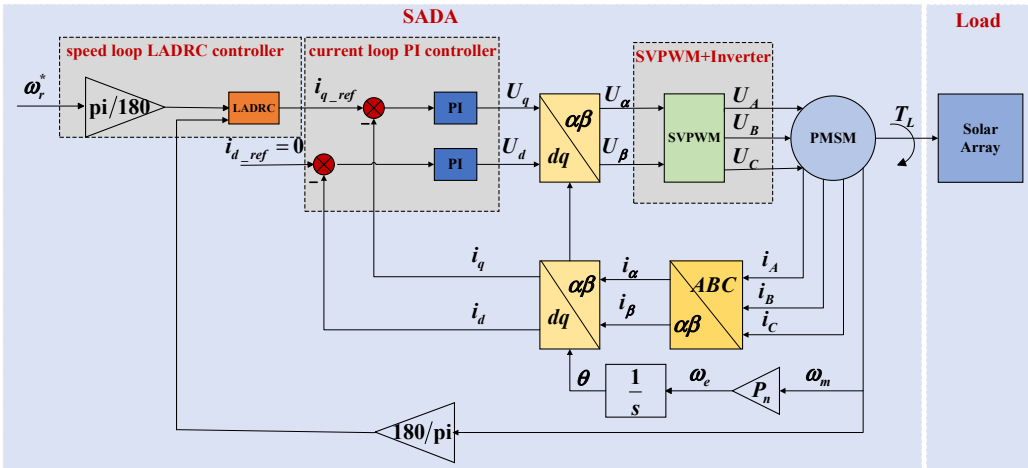

Figure 1. Block diagram of the SADA drive system.

2.1. PMSM Model

Considering the principles of the SADA system for operating the solar panel, it is widely recognized that the motor functions at remarkably low speeds [26]. Consequently, this research implements a vector control approach for the PMSM based on rotor field orientation to operate the SADA system and achieve accurate positioning of the magnetic field. Typically, the vector control system for PMSM employs the mathematical model based on the synchronous rotation of the rotor within the direct–quadrature (d–q) coordinate framework. The arrangement of the permanent magnet chain φ situated within the rotor of the PMSM remains unchanged. In particular, a surface-mounted PMSM ($L_d = L_q = L$) is employed. The mathematical model of the permanent magnet synchronous motor in the d-q rotating coordinate system has been simplified and organized based on reference [27], as follows:

$$\begin{cases} L\frac{\mathrm{d}i_d}{\mathrm{d}t} = u_d - R_s i_d + Lp\omega i_d \\ L\frac{\mathrm{d}i_q}{\mathrm{d}t} = u_q - R_s i_q - Lp\omega i_d - \varphi p\omega \\ T_e = \frac{3}{2}\varphi p i_q \\ J\dot{\omega} = T_e - T_L \end{cases} \tag{1}$$

where u_d and u_q are the d and q frame voltage, φ is the permanent magnet chain, ω is the mechanical angular velocity of the rotor, R_s is the armature resistance, i_d and i_q are the d and q frame current, p is the number of rotor poles, L is the inductance, J is the moment of inertial, T_L is the load torque, and T_e is the electromagnetic torque.

2.2. Dynamic Model of the Solar Array

SADA serves as the electromechanical link between the solar array and the satellite body, installed directly on the latter. Reference [28] establishes a direct connection between the stepper motor-driven SADA system and the solar panel rotation axis. In contrast, reference [29] introduces a highly stable wing driving mechanism that utilizes a perma-

nent magnet synchronous motor to directly drive the sun wing, marking a significant advancement in this area.

The connection between the SADA output shaft and the solar panel rotation axis is direct. Thus, this study incorporates a permanent magnet synchronous motor to drive the SADA, where the solar array's load torque in Equation (1) coincides with the motor's driving torque. SADA is driven by the PMSM. The motor speed and angle are equal to the speed and angle of the solar panel.

To simplify the calculations and emphasize the key points, this article discusses the following assumptions:

(1) The mass and inertia of the satellite's rigid body platform are significantly greater than those of the solar wing, allowing the satellite platform to be regarded as stationary and chosen as the reference object during the operation of the solar wing;

(2) The aspect ratio of the solar wing is sufficiently large, enabling the application of the Lagrange theory for dynamic modeling;

(3) The deflection in the solar array can cause vibrations within the SADA system, with primary torsional modes being the dominant source of these vibrations. The higher-order modes have a minimal impact on the SADA system, with the analysis focusing solely on the first-order torsional modes.

This study examines the interaction between the flexural vibrations of the solar array and the drive system, utilizing the kinematic and dynamic equations presented in reference [30] as follows:

$$\begin{cases} J_s\dot{\omega} + \boldsymbol{F}\ddot{\boldsymbol{q}} = T_L \\ \ddot{\boldsymbol{q}} + \boldsymbol{D}\dot{\boldsymbol{q}} + \boldsymbol{K}\boldsymbol{q} + \boldsymbol{F}\dot{\omega} = 0 \end{cases} \tag{2}$$

where J_s is the rotational moment of inertia of the solar wing around the axis of rotation, $\boldsymbol{F}$ is the coupling coefficient of solar wing rotation and deflection, ω is the mechanical angular velocity of solar wing rotation, $\boldsymbol{q} \in R^N$ is the modal coordinate, $\boldsymbol{K} \in R^{N\times N}$ is the modal rigidity, and $\boldsymbol{D} \in R^{N\times N}$ is the modal damping.

At the first-order flexible mode, K, D are expressed as

$$\begin{cases} D = 2\xi\omega_f \\ K = \omega_f^2 \end{cases} \tag{3}$$

where ω_f is the modal frequency, and ξ is the damping factor, which generally takes as 0.005 in engineering.

3. PI Control Effect Analysis

Due to the flexible nature of the solar wing, the limited capability of the system bandwidth poses a challenge for increasing system stiffness through higher gain in the speed loop using PI control methods, leading to inadequate suppression of speed fluctuations [31]. Consequently, achieving optimal control effects with PI control in the SADA drive system with a solar wing proves to be a complex task.

In the process of adjusting the speed loop, it is necessary to consider that adjustments to the current loop controller parameters have already been made due to the significant bandwidth distinction between the speed and current loops [32]. Thus, the speed loop is developed independently without factoring in the current loop effects. The control block diagram illustrating the PMSM-driven solar wing load's speed loop with PI control is depicted in Figure 2.

According to Figure 2, the closed-loop transfer function for the speed loop PI control is

$$\frac{\omega_r(s)}{\omega_r^*(s)} = \frac{\frac{3}{2}p\varphi k_p\left(1+\frac{1}{\tau s}\right)}{s^2\left(J_s - \frac{F^2s^2}{s^2+2\xi\omega_f s+\omega_f^2}\right) + \frac{3}{2}p\varphi k_p\left(1+\frac{1}{\tau s}\right)} \tag{4}$$

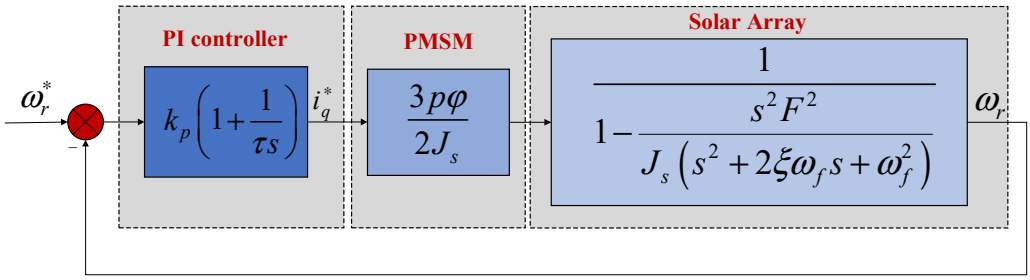

Figure 2. Angular velocity loop control block.

Setting $k_i = \frac{k_p}{\tau}$, where ω_r is the actual motor speed, ω_r^* is the reference speed, k_p is the scale factor, τ is the integral time constant, F is the coupling coefficient in the solar panel dynamic model, ξ is the damping factor in the solar panel dynamic model, and k_i is the integral factor.

By decomposing the PI regulator:

$$k_p\left(1+\frac{1}{\tau s}\right) = k_p + \frac{k_p}{\tau}\frac{1}{s} = k_p + \frac{k_i}{s} \tag{5}$$

The relationship between the speed loop cutoff frequency ω_c, phase margin p_m, and the parameters of the PI regulator k_p, k_i is expressed as follows:

$$\begin{cases} \omega_c = \frac{3}{2}k_p p\varphi\frac{1}{(J_s-F^2)} \\ p_m = \arctan\left(\omega_c\frac{k_p}{k_i}\right) \end{cases} \tag{6}$$

The parameters used in the speed loop control block diagram are shown in Table 1.

Table 1. Speed loop control block diagram usage parameters.

Parameter	Value	Unit
k_p	8	/
τ	0.1667	/
p	30	/
φ	0.0625	Wb
J_s	23.4	$\mathrm{kg}\cdot\mathrm{m}^2$
ξ	0.005	/
F	3.17	$\mathrm{kg}^{1/2}\cdot\mathrm{m}$
ω_f	1.624	Hz

The bode plot frequency characteristics of the PI-controlled SADA system are presented in Figure 3. Upon examination of Figure 3, it is evident that the oscillation frequency of the solar wing closely aligns with the frequency bandwidth of the speed loop. Continued increment of the value of k_p results in the coupling of the control system's bandwidth frequency with the inherent system frequency, leading to resonance. Consequently, enhancing the damping of the system and achieving vibration suppression proved to be challenging. Moreover, the phase margin of the system is as low as 9 degrees, specifically 8.87 degrees, making it highly susceptible to instability. Consequently, achieving a balance between dynamic performance and stability using PI control is challenging without compromising the control effect.

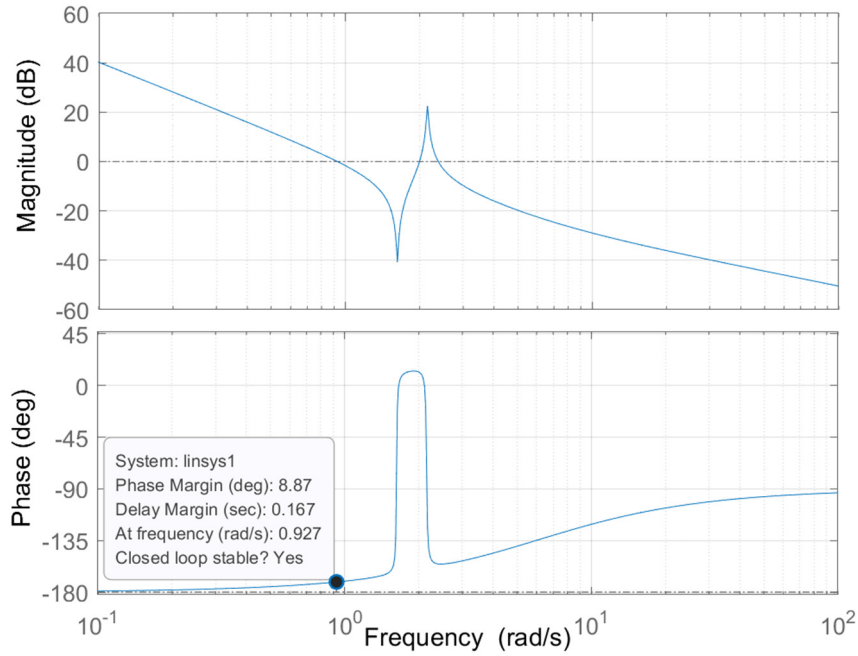

Figure 3. PI control bode.

4. Design of the Proposed LADRC for Speed Loop

The function of the speed loop is to eliminate load torque disturbances and ensure that the actual speed of the motor accurately tracks the given speed. For the SADA system, traditional PI control exists in the poor adaptation of parameters, overshooting, and speed interference is insufficient [33], while the traditional ADRC exists in the parameters of the more difficult to adjust and so on [34]. Therefore, in this paper, the first-order LADRC strategy is designed for the PMSM, which adopts the first-order LADRC for the outer loop of the rotational speed.

4.1. LADRC Design

Factors interfering with the speed loop in the speed control system of the PMSM mainly include current loop control, inaccurate parameters of PMSM, friction, and load torque variations [35], and thus require algorithms with strong anti-interference ability to control them. The speed loop LADRC designed in this paper mainly consists of the first-order linear tracking differentiator (LTD), the proportional feedback control module (P), and the second-order linear expansion state observer (LESO). The structure of the LADRC is shown in Figure 4.

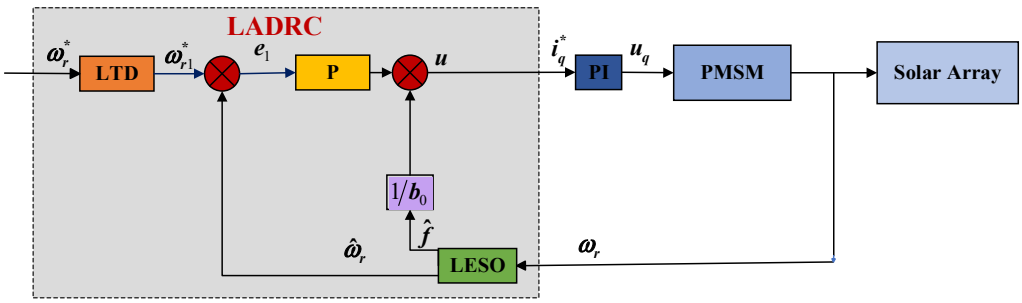

Figure 4. Block diagram of LADRC control-based rotational speed loop.

Where ω_r^* is the expectation of the given speed, ω_{r1}^* is the desired tracking signal for the given speed, e_1 is the deviation of the tracking speed from the observer speed estimate, u is the controller output whose output is the current loop controller input i_q^*, u_q is the current loop controller output, ω_r is the actual motor speed, $\hat{\omega}_r$ is the observed estimate

of the output of the controlled object, $\hat{f}$ is the observed estimate of the total disturbance in the speed loop control loop, and b_0 is the disturbance compensation factor of the speed loop controller.

According to Equation (1):

$$\frac{\mathrm{d}\omega_r}{\mathrm{d}t} = \frac{3}{2}\frac{p\varphi}{J}i_q - \frac{T_L + B\omega_r}{J} \tag{7}$$

where B is the viscous friction coefficient, and T_L is the load moment.

Setting $b_0 = \frac{3p\varphi}{2J}$ is the current gain of the speed loop controller, $f(T_L, \omega_r, B, t) = \frac{(B\omega_r - T_L)}{J}$ is the internal perturbation of the speed control loop. Thus, Equation (7) can be rewritten as

$$\dot{\omega}_r = b_0 i_q + f(T_L, \omega_r, B, t) \tag{8}$$

From Equation (8), the speed control loop is the first-order system.

4.1.1. LESO Design

LESO is the heart part of LADRC [36]. According to the first-order system of the speed loop in Equation (8), the LESO is designed. Let the unknown external perturbation of the system be f_0 and the internal perturbation of the system be f_1, and then the total internal and external perturbation of the system $f = f_0 + f_1$.

Let $x_1 = \omega_r$, $x_2 = f$, $\frac{\mathrm{d}x_2}{\mathrm{d}t} = \hat{f}$. And y is the input system. Then, the following equation of state can be obtained as follows:

$$\begin{cases} y = x_1 \\ \dot{x}_1 = x_2 + b_0 i_q \\ \dot{x}_2 = \hat{f} \end{cases} \tag{9}$$

The space equation of state of the observer can be obtained from Equation (8):

$$\begin{cases} \dot{\boldsymbol{x}} = \boldsymbol{A}\boldsymbol{x} + \boldsymbol{B}i_q + \boldsymbol{E}\hat{f} \\ y = \boldsymbol{C}\boldsymbol{x} \end{cases} \tag{10}$$

where $\dot{\boldsymbol{x}} = \left[\dot{x}_1, \dot{x}_2\right]^{\mathrm{T}}$, $\boldsymbol{A} = \begin{bmatrix} 0 & 1 \\ 0 & 0 \end{bmatrix}$, $\boldsymbol{B} = [b_0, 0]^{\mathrm{T}}$, $\boldsymbol{E} = [0, 1]^{\mathrm{T}}$, and $\boldsymbol{C} = [1, 0]$.

According to the linear expansion state observation theory referenced in [37], this paper proposes a differential equation model of the LESO:

$$\begin{cases} e_1 = \omega_{r1}^* - \hat{\omega}_r \\ \dot{\hat{\omega}}_r = \hat{f} + b_0 i_q + \beta_1 e_1 \\ \dot{\hat{f}} = \beta_2 e_1 \end{cases} \tag{11}$$

where $\hat{\omega}_r$ is the observed estimate of the system state variable x_1, which is the estimate of the speed ω_r, $\hat{f}$ is the observed estimate of the system state variable x_2, which is the estimate of the total system perturbation f, and β_1, β_2 are the gain of the linearly expanding state observer.

If the linearly expanding state observer is to be stabilized, it is required that the eigenvalues of the characteristic equations of Equation (10) are all negative, and the characteristic equations are as follows:

$$s^2 + \beta_1 s + \beta_2 = (s + \omega_o)^2 \tag{12}$$

where ω_o is the observer bandwidth, and $\omega_o > 0$. Expressing the values of β_1 and β_2 in terms of ω_o, as follows:

$$\begin{cases} \beta_1 = 2\omega_o \\ \beta_2 = \omega_o^2 \end{cases} \tag{13}$$

4.1.2. LTD Design

In the transition process, LTD is mainly used to ease the contradiction between the continuously varying speed feedback and the discontinuously varying speed given [38]. In this paper, the control object is the first-order system, so the LTD only needs to generate a tracking signal to follow the fixed rotational speed. The first-order linear differentiator is essentially the first-order inertial link whose input is the desired given speed and whose output is the tracking signal at the desired given speed. The transfer function is as follows:

$$\frac{\omega_r^*(s)}{\omega_{r1}^*(s)} = \frac{1}{\frac{s}{T_1} + 1} \tag{14}$$

where T_1 is the time constant. The larger the T_1, the faster the tracking speed.

4.1.3. Proportional Feedback and Disturbance Compensation

Linear state error feedback is mainly used to eliminate disturbances. According to Figure 4, $\hat{f}$ can be estimated using LESO observation. The output quantity u from the LADRC is obtained as follows:

$$u = K_p(\omega_{r1}^* - \hat{\omega}_r) - \frac{\hat{f}}{b_0} \tag{15}$$

where K_p is the proportional constant.

4.2. System Stability Analysis

After completing the design of a controller, it should first be ensured that the entire closed-loop system containing the controller is stabilized; if the system cannot be stabilized, it is not a good choice of control scheme, no matter how advanced the controller is. Since the response speed of the rotational speed loop is usually much lower than that of the current inner loop, the current loop transfer function is assumed to be approximated as 1 for the rotational speed loop linear LADRC control system designed in this paper.

Through reference [39], the stability of the LADRC model proposed in this paper is proved.

From LESO:

$$\begin{cases} \dot{\hat{\omega}}_r = \hat{f} + \beta_1(\omega_{r1}^* - \hat{\omega}_r) + b_0 i_q \\ \dot{\hat{f}} = \beta_2(\omega_{r1}^* - \hat{\omega}_r) + h(\hat{\omega}_r, f_0) \end{cases} \tag{16}$$

where $h(\hat{y}, f_0)$ is the unknown total perturbation observed by LESO.

Determine the values of β_1, β_2 from Equation (13). Let $\widetilde{\omega}_r = \omega_{r1}^* - \hat{\omega}_r$, $\widetilde{f} = f - \hat{f}$. According to Equations (9) and (16), the error of LESO is calculated as follows:

$$\begin{cases} \dot{\widetilde{\omega}}_r = \widetilde{f} - 2\omega_o\widetilde{\omega}_r \\ \dot{\widetilde{f}} = h(\omega_r, f_0) - h(\hat{\omega}_r, f_0) - \omega_o^2\widetilde{\omega}_r \end{cases} \tag{17}$$

where $h(\omega_r, f_0)$ is the actual value of the unknown total perturbation. To simplify the expression, take $\begin{cases} \varepsilon_1 = \widetilde{\omega}_r \\ \varepsilon_2 = \frac{\widetilde{f}}{\omega_o} \end{cases}$, and then Equation (17) reduces to

$$\dot{\varepsilon} = \omega_o \begin{bmatrix} -2 & 1 \\ -1 & 0 \end{bmatrix} \begin{bmatrix} \varepsilon_1 \\ \varepsilon_2 \end{bmatrix} + \begin{bmatrix} 0 \\ 1 \end{bmatrix} \frac{h(\omega_r, f_0) - h(\hat{\omega}_r, f_0)}{\omega_o} \tag{18}$$

Let $\boldsymbol{A}_0 = \begin{bmatrix} -2 & 1 \\ -1 & 0 \end{bmatrix}$, $\boldsymbol{B}_0 = \begin{bmatrix} 0 \\ 1 \end{bmatrix}$, $\boldsymbol{\varepsilon} = \begin{bmatrix} \varepsilon_1 \\ \varepsilon_2 \end{bmatrix}$. From Equation (12), the double pole configuration of LESO is at $-\omega_o$, knowing that A_0 is Hurwitz stabilized. Then, there exists a positive definite Hermite matrix $\boldsymbol{N}$ such that satisfies $\boldsymbol{A}_0^{\mathrm{T}}\boldsymbol{N} + \boldsymbol{N}^{\mathrm{T}}\boldsymbol{A}_0 = -\boldsymbol{M}$, where

$\boldsymbol{N} = \begin{bmatrix} 0.5 & -0.5 \\ -0.5 & 1.5 \end{bmatrix}$ and $\boldsymbol{M} = \begin{bmatrix} 1 & 0 \\ 0 & 1 \end{bmatrix}$. Define the Lyapunov function $V(\boldsymbol{\varepsilon}) = \boldsymbol{\varepsilon}^{\mathrm{T}}\boldsymbol{N}\boldsymbol{\varepsilon}$, the derivation of which is given by

$$\dot{V}(\boldsymbol{\varepsilon}) = -\omega_o\left(\varepsilon_1^2 + \varepsilon_2^2\right) + \frac{h(\omega_r, f_0) - h(\hat{\omega}_r, f_0)}{\omega_o}(-\varepsilon_1 + 3\varepsilon_2) \tag{19}$$

Since $h(\omega_r, f_0)$ satisfies the Lipschitz continuity condition in the domain of definition, then there exists a constant c such that $|h(\omega_r, f_0) - h(\hat{\omega}_r, f_0)| \leq c\|\omega_r - \hat{\omega}_r\|$, and thus $\frac{h(\omega_r, f_0) - h(\hat{\omega}_r, f_0)}{\omega_o}$ satisfies

$$\frac{h(\omega_r, f_0) - h(\hat{\omega}_r, f_0)}{\omega_o}(-\varepsilon_1 + 3\varepsilon_2) \leq c(-\varepsilon_1 + 3\varepsilon_2)\frac{\|\omega_r - \hat{\omega}_r\|}{\omega_o} \tag{20}$$

Because $-\varepsilon_1 + 3\varepsilon_2 = 2\boldsymbol{\varepsilon}^{\mathrm{T}}\boldsymbol{N}\boldsymbol{B}_0$, Equation (20) becomes

$$2\boldsymbol{\varepsilon}^{\mathrm{T}}\boldsymbol{N}\boldsymbol{B}_0\frac{h(\omega_r, f_0) - h(\hat{\omega}_r, f_0)}{\omega_o} \leq 2c\boldsymbol{\varepsilon}^{\mathrm{T}}\boldsymbol{N}\boldsymbol{B}_0\frac{\|\omega_r - \hat{\omega}_r\|}{\omega_o} \tag{21}$$

When $\omega_o \geq 1$, here is $\frac{\|\omega_r - \hat{\omega}_r\|}{\omega_o} = \frac{\|\hat{\omega}_r\|}{\omega_o} \leq \|\hat{\omega}_r\|$. At the same time, because of $\|\boldsymbol{N}\boldsymbol{B}_0 c\|^2 - 2\|\boldsymbol{N}\boldsymbol{B}_0 c\| + 1 \geq 0$, there is

$$2\boldsymbol{\varepsilon}^{\mathrm{T}}\boldsymbol{N}\boldsymbol{B}_0\frac{h(\omega_r, f_0) - h(\hat{\omega}_r, f_0)}{\omega_o} \leq \left(\|\boldsymbol{N}\boldsymbol{B}_0 c\|^2 + 1\right)\|\boldsymbol{\varepsilon}\|^2 \tag{22}$$

where $\|\boldsymbol{\varepsilon}\|^2 = \boldsymbol{\varepsilon} \cdot \boldsymbol{\varepsilon} = \varepsilon_1^2 + \varepsilon_2^2$. It is the square of the vector norm.

From Equations (19) and (22):

$$\dot{V}(\boldsymbol{\varepsilon}) = -\omega_o\left(\varepsilon_1^2 + \varepsilon_2^2\right) + \left(\|\boldsymbol{N}\boldsymbol{B}_0 c\|^2 + 1\right)\|\boldsymbol{\varepsilon}\|^2 \tag{23}$$

When $\omega_o > \|\boldsymbol{N}\boldsymbol{B}_0 c\|^2 + 1$, $\dot{V}(\boldsymbol{\varepsilon}) \leq 0$. In the sense of Lyapunov asymptotic stabilization, there is

$$\begin{cases} \lim\limits_{t\to\infty} \widetilde{\omega}_r(t) = 0 \\ \lim\limits_{t\to\infty} \widetilde{f}(t) = 0 \end{cases} \tag{24}$$

from Equations (15) and (16):

$$u = K_p(\omega_{r1}^* - \hat{\omega}_r) - \frac{\hat{f}}{b_0} \tag{25}$$

Let $e = \omega_{r1}^* - \hat{\omega}_r$. From Equation (23):

$$u = K_p(e + \widetilde{\omega}_r) - \frac{\left(f - \widetilde{f}\right)}{b_0} \tag{26}$$

$$\dot{e} = \dot{\omega}_{r1}^* - \dot{\hat{\omega}}_r = -K_p(e + \widetilde{\omega}_r) - \widetilde{f} + \dot{\omega}_{r1}^* \tag{27}$$

With the help of a large error control signal at the beginning to excite the object so that the output will rush out as soon as possible. Then, the system becomes

$$\dot{e} = -K_p(e + \widetilde{\omega}_r) - \widetilde{f} \tag{28}$$

Describe Equation (28) using the state space form, as follows:

$$\dot{e} = [K_p]e(t) + [K_p, -1]\begin{bmatrix} \widetilde{\omega}_r(t) \\ \widetilde{f}(t) \end{bmatrix} \tag{29}$$

$-K_p$, such that the characteristic polynomial $s - K_p$, satisfies the Laws criterion, so $[-K_p]$ is Hurwitz stable. At the same time, from Equation (10), $\lim_{t\to\infty}\left\|[K_p, -1]\begin{bmatrix}\widetilde{\omega}_r(t)\\ \widetilde{f}(t)\end{bmatrix}\right\| = 0$, so $\lim_{t\to\infty}\|e(t)\| = 0$. According to Lyapunov's asymptotic theory, it is known that LADRC is asymptotically stable.

5. Simulation and Result Analysis

In order to ensure that the solar wing array remains perpendicular to the incident sunlight vector, the drive device will maintain a constant angular speed of 0.065°/s. The performance of the proposed LADRC was verified by simulating the improved LADRC and traditional PI separately under the same input conditions. The parameters of the permanent magnet synchronous motor of the driving device can be found in Table 2.

Table 2. Input parameters of SADA.

Parameter	Value	Unit
p	30	/
L	5	mH
φ	0.0625	Wb
R_s	4.4	Ω
J	0.01	$kg \cdot m^2$
V_{dc}	28	V

The simulation parameters of the current loop PI controller are shown in Table 3. The proportional and integral coefficient parameter settings for both the d-axis and q-axis current loops are analogous. Initially, the bandwidth method is employed to estimate the parameter values, followed by the trial-and-error method to refine the output results for improved performance.

Table 3. Current loop PI parameters.

Current Loop	Parameter	Value	Unit
d axis current loop	K_{dp}	14.13	/
	K_{di}	6421.5	/
q axis current loop	K_{qp}	14.13	/
	K_{qi}	6421.5	/

where K_{dp}, K_{di} represent the proportional and integral coefficients, respectively, of the d-axis current loop, while K_{qp}, K_{qi} denote the proportional and integral coefficients, respectively, of the q-axis current loop.

5.1. Low-Speed Control Simulation of the Motor under No-Load Conditions

Under unloaded motor conditions, when the motor speed is 0.065°/s, the operating curves for LADRC and traditional PI control are depicted in Figure 5. Analysis of Figure 5 reveals that the LADRC approach achieves a stable operation with a time to reach the desired speed of 0.004 s and no overshoot. On the other hand, traditional PI control also achieves stable operation with a slightly longer time to reach the rated speed of 0.0047 s, which is comparable to LADRC. However, traditional PI control exhibits an overshoot of 0.01.

The data in Table 4 can be derived from Figure 5. The analysis results indicate that the proposed LADRC exhibits quicker response speed and superior low-speed performance compared to the traditional PI controller.

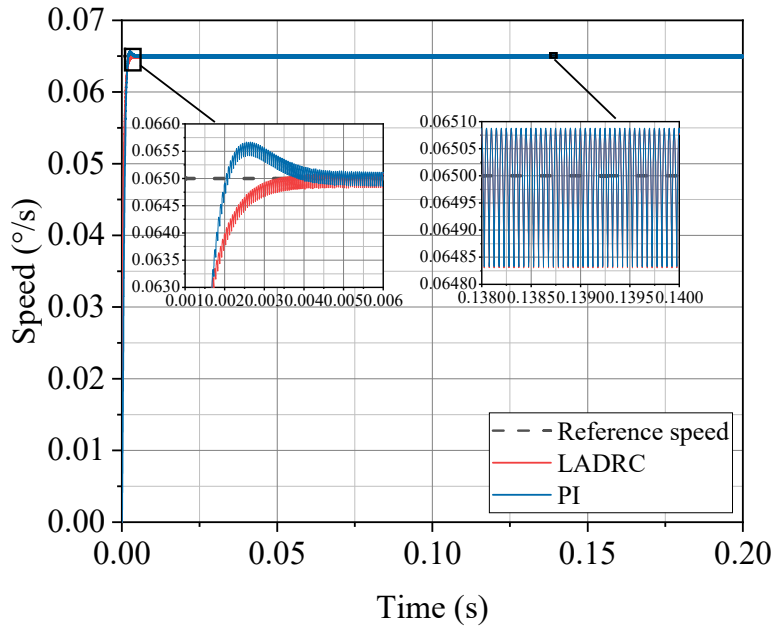

Figure 5. Running response curve of the PMSM with the speed of 0.065°/s under no-load conditions.

Table 4. Running status of two controllers at the speed of 0.065°/s.

Controllers	Setting Time (s)	Overshoot
LADRC	0.004	without
PI	0.0047	0.01

5.2. Variable Speed Control Simulation of the Motor at Low Speed under No-Load Conditions

The motor speed variation curve is illustrated in Figure 6. It is evident from Figure 6 that the proposed LADRC system reaches the rated speed from 0 in 0.104 s and operates steadily without any overshoot. In comparison, the traditional PI control system takes 0.11 s to reach the desired speed from 0, with an overshoot of 0.0115.

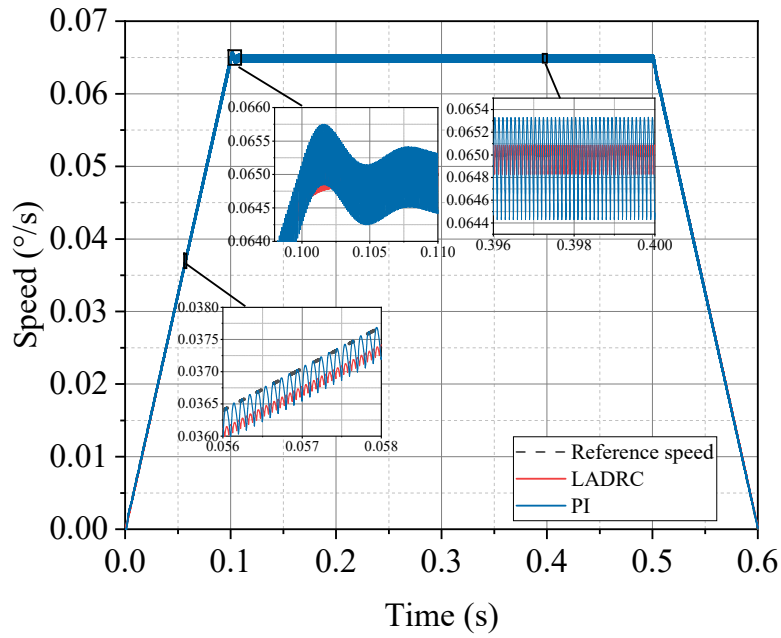

Figure 6. Speed change response curve of the PMSM under no-load conditions.

The data in Table 5, obtained from Figure 6, shows that the proposed LADRC has a faster response speed and better low-speed operation stability compared to traditional PI control.

Table 5. Running status of two controllers at the speed of 0–0.065–0°/s.

Controllers	Response Time (s)	Overshoot
LADRC	0.104	without
PI	0.11	0.0115

5.3. Low-Speed Control Simulation of the Motor under Load

The motor speed remains at 0.065 while loads of 0.005 Nm and 1 Nm are successively applied after the motor runs without load for 0.2 s. The speed curve of the motor can be observed in Figures 7 and 8.

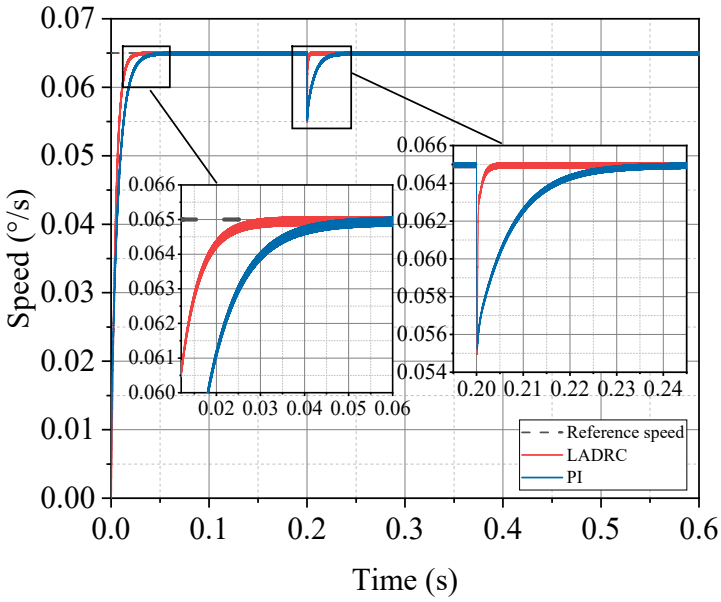

Figure 7. 0.005 Nm load output curve.

Figure 7 illustrates that following a load increase of 0.005 Nm within 0.2 s, the LADRC control system experiences a maximum speed drop of approximately 0.05494°/s, with a recovery time of 0.204 s to reach the rated speed. In comparison, traditional PI control shows a similar maximum speed drop of about 0.055°/s, but takes 0.23 s to return to a stable state.

Figure 8 illustrates that with the 1 Nm load applied to the motor, the maximum speed of LADRC decreases to −2.039°/s, reaching the rated speed in 0.206 s. In comparison, the maximum speed of the traditional PI drops to approximately −1.999°/s, although it takes longer to return to stability at 0.236 s. The driving voltage being low limits the motor to driving only a small load. Consequently, when the motor is tasked with the 1 Nm load, it surpasses the maximum torque instantly, causing the motor to reverse and resulting in a negative speed.

The data presented in Table 6 indicates that the time taken for the system to restore stability is directly related to the size of the motor drive load. Despite the fact that the maximum speed drop of LADRC is greater than that of traditional PI when the load is increased, LADRC demonstrates a notably quicker and more stable response time in reaching a desired speed compared to PI.

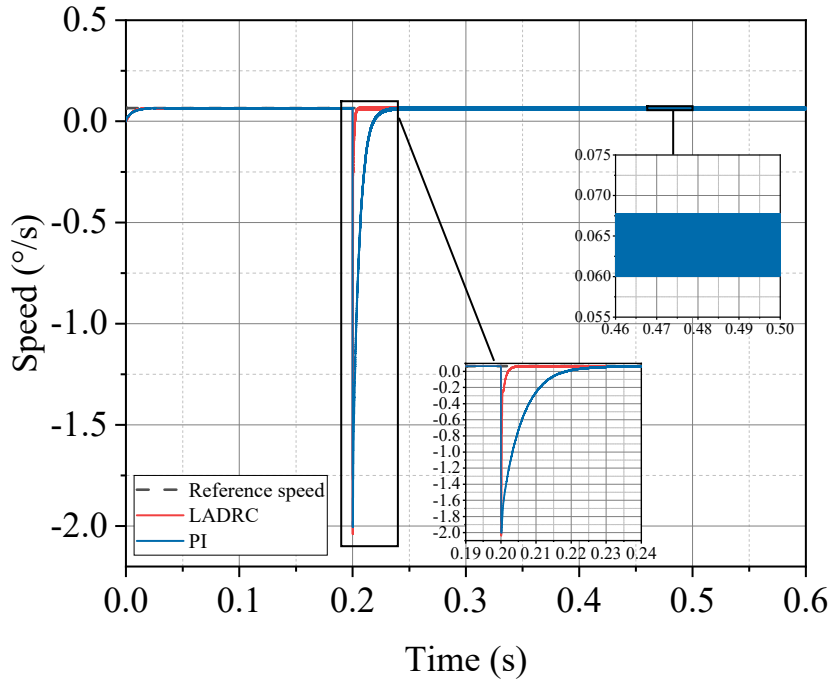

Figure 8. 1 Nm load output curve.

Table 6. Runing status of two controllers at different loads.

Load (Nm)	Controllers	Response Time (s)	Max Speed Landing (°/s)
0.005	LADRC	0.204	0.05494
	PI	0.23	0.055
1	LADRC	0.206	−2.039
	PI	0.236	−1.999

5.4. Low-Speed Control Simulation of the PMSM under Load of the Solar Array

The process of 'start-tracking-braking' for the solar wing is simulated and verified. Assume that the initial state of the solar panel is a stationary state. The data for the flexible sail panels can be referenced in [29], as illustrated in Table 7. The LADRC simulation parameters are provided in Table 8.

Table 7. Parameters of the solar wing simulation load.

Parameters	Value	Unit
ω_r^*	0.065	°/s
J_s	23.4	$kg \cdot m^2$
F	3.17	$kg^{1/2} \cdot m$
ξ	0.005	/
ω_f	1.624	Hz

Table 8. Speed loop LADRC parameters.

Component of LADRC	Parameters	Value
LTD	T_1	505
LESO	ω_c	200
P	ω_o	360
	b_0	96

During the start–tracking–braking simulation process, the solar panel has a start planning time of 0.1 s, with analysis results presented in Figures 9–11. In comparison to the scenario without added load presented in Figure 6, the initial phase is significantly affected by friction torque, resulting in a noticeable deviation in speed tracking. The time required to achieve stable tracking using the LADRC method is longer than that observed without load, which may be attributed to the lower first-order frequency of the solar sail. Consequently, the overshoot associated with the PI method is reduced in the presence of a load, leading to improved stability. Figure 9 demonstrates that stable tracking is largely achieved post-planning completion. In the speed change phase, the PI recovery stabilization time is brief, yet overshoot occurs with an amount of 0.0015. In contrast, LADRC shows no overshoot.

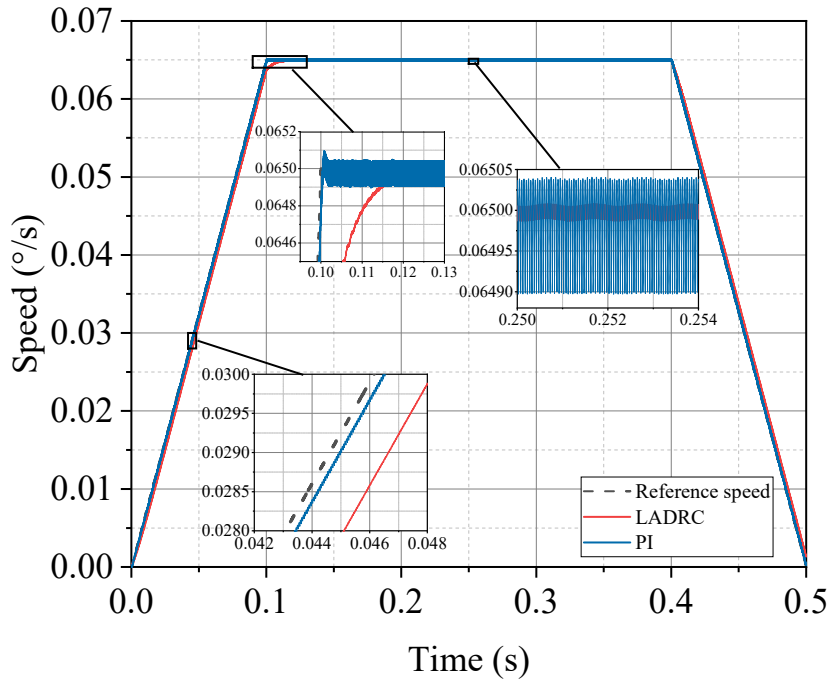

Figure 9. Servo angular velocity and planning angular velocity.

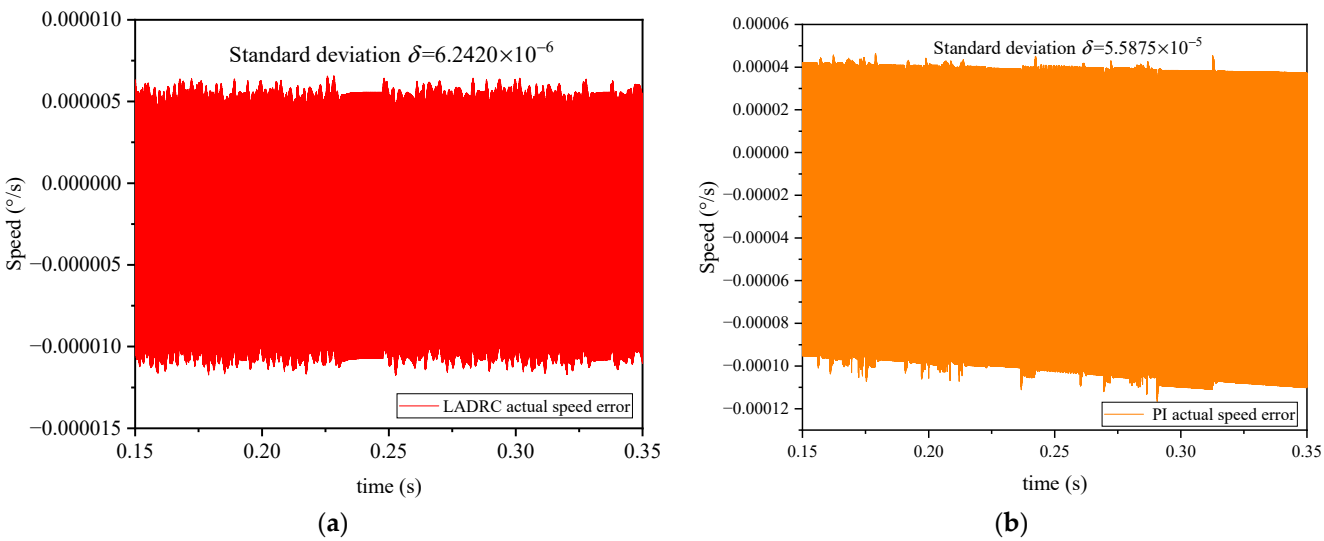

Figure 10. Deviation between the servo angular and the planning angular velocity. (**a**) Deviation between LADRC and the planning angular velocity; (**b**) deviation between PI and the planning angular velocity.

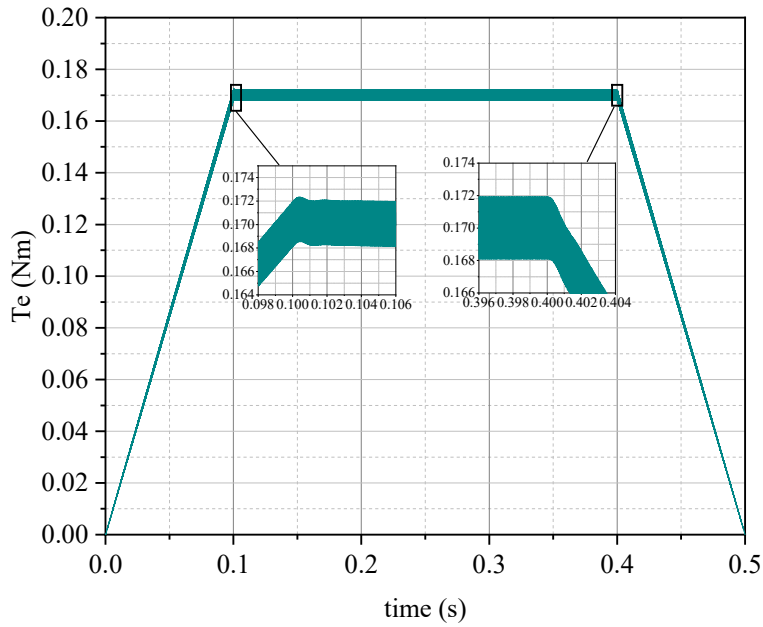

Figure 11. Output torque of SADA.

The SADA's speed variations are measured with the 500 ms sampling period, and the speed standard deviation δ is evaluated using Equation (30):

$$\delta = \sqrt{\frac{\sum_{i=1}^{n} (v_i - \overline{v})^2}{n-1}} \tag{30}$$

where n is the total number of samples, v_i is the rotational speed of the moment, and $\overline{v}$ stands for average speed. The relevant values of the standard deviation of the rotation speed are shown in Table 9.

Table 9. The relevant values of the standard deviation.

Controllers	Sample Size	Average Speed	Standard Deviation
LADRC	246,875	0.064994	6.2420×10^{-6}
PI	246,875	0.064948	5.5875×10^{-5}

Figure 10 clearly demonstrates that the deviation between the actual angular velocity of LADRC and the planned command angular velocity is smaller than PI during the tracking process. The deviation between the actual angular speed and the expected speed for the traditional PI control strategy ranges from -1.2×10^{-4} to 4×10^{-5} with the standard deviation of 5.5875×10^{-5}. In contrast, the deviation for the LADRC strategy spans from -1.2×10^{-5} to 5.5×10^{-6}, accompanied by the standard deviation of 6.2420×10^{-6}.

For speed stability, according to reference [40], Equation (31) can be obtained as follows:

$$v_{st} = \frac{\omega_r^*}{\delta} \tag{31}$$

where v_{st} is the speed stability, ω_r^* is the rated angular speed during stable tracking, set to $0.065°/\mathrm{s}$, and δ is the speed standard deviation.

As indicated in Table 10, when operating at the rated speed of $0.065°/\mathrm{s}$, the standard deviation of LADRC is 6.2420×10^{-6} under stable conditions, with the corresponding speed stability of 9.603×10^{-5}. Similarly, the standard deviation of PI under stable operation at the rated speed is 5.5875×10^{-5}, with the speed stability of 8.5962×10^{-4}. Analysis of

rotational speed stability reveals that LADRC demonstrates superior control effectiveness, suggesting its advantageous role in maintaining the high accuracy of the SADA system.

Table 10. The speed stability of two controllers during tacking.

Controllers	Standard Deviation	Stability of Speed
LADRC	6.2420×10^{-6}	9.603×10^{-5}
PI	5.5875×10^{-5}	8.5962×10^{-4}

Figure 11 illustrates that the driving torque of the solar panel driving device does not exceed 0.174 Nm during startup and speed change. Once stable tracking is achieved, the motor output torque remains below 0.172 Nm.

6. Conclusions

This study focuses on addressing the issue of high-stability tracking control for solar wings. When traditional PI control is used in the solar wing drive system, there is a lack of phase margin. To overcome this, the LADRC method is proposed to ensure stability in high-stability SADA-driven solar wings. The study also includes a stability analysis of the SADA system with the LADRC controller using the Lyapunov stability theory. Simulation results presented in this paper demonstrate the effectiveness of the proposed method, showing that motor speed stability can reach $9.603 \times 10^{-5}(3\sigma)$.

Author Contributions: Conceptualization, J.W. (Jianyuan Wang) and J.W. (Jian Wang); methodology, S.G.; software, S.G.; validation, S.G.; formal analysis, S.G.; investigation, S.G. and Z.H.; resources, J.W. (Jianyuan Wang) and J.C.; data curation, S.G.; writing—original draft preparation, S.G.; writing—review and editing, J.W. (Jianyuan Wang) and S.G.; visualization, J.W. (Jianyuan Wang); supervision, J.W. (Jianyuan Wang); project administration, J.W. (Jianyuan Wang) and J.C. All authors have read and agreed to the published version of the manuscript.

Funding: This research was funded by the National Science and Technology Major Project of the Ministry of Science and Technology of China, grant number D030304, and the Shanghai Aerospace Science and Technology Innovation Fund, grant number SAST2022-024.

Data Availability Statement: Some or all data, models, or codes that support the findings of this study are available from the corresponding author upon reasonable request.

Conflicts of Interest: The authors declare no conflicts of interest.

References

1. Liu, Q.; He, W.; Tang, G.a. Theory and simulation of solar array panel's vibration control drived by electricmotor. *J. Vib. Shock.* **2009**, *28*, 119–122+206. (In Chinese) [CrossRef]
2. Zheng, Z.; Cheng, W.; Gou, X.; Wang, G. Research on Micro Vibration Control of Satellite Flexible Structure Using Piezoelectric Variable Stiffness Actuator. In Proceedings of the 2023 IEEE 23rd International Conference on Software Quality, Reliability, and Security Companion (QRS-C), Chiang Mai, Thailand, 22–26 October 2023. [CrossRef]
3. Ding, Y.; Xiao, X. A Resonance Suppression Method Based on Kalman State Estimation and Load Torque Compensation for Flexible Load Driven by Permanent Magnet Synchronous Motor. *Proc. CSEE* **2017**, *37*, 3892–3900. (In Chinese) [CrossRef]
4. Xie, X.; Wei, C.; Gu, Z.; Shi, K. Relaxed Resilient Fuzzy Stabilization of Discrete-Time Takagi–Sugeno Systems via a Higher Order Time-Variant Balanced Matrix Method. *IEEE Trans. Fuzzy Syst.* **2022**, *30*, 5044–5050. [CrossRef]
5. García-Chávez, R.E.; Silva-Ortigoza, R.; Hernández-guzmáN, V.M.; Marciano-Melchor, M.; Orta-Quintana, Á.A.; García-Sánchez, J.R.; Taud, H. A Robust Sliding Mode and PI-Based Tracking Control for the MIMO "DC/DC Buck Converter–Inverter–DC Motor" System. *IEEE Access* **2023**, *11*, 119396–119408. [CrossRef]
6. Cao, Y.; Cao, D.; Wei, J.; Huang, W. Modeling for solar array drive assembly system and compensating for the rotating speed fluctuation. *Aerosp. Sci. Technol.* **2019**, *84*, 131–142. [CrossRef]
7. Ji, L.; Jia, H.; Chen, M.; Kong, L.; Hu, H.; Guo, L. Modeling and Disturbance Compensation Sliding Mode Control for Solar Array Drive Assembly System. *Aerospace* **2023**, *10*, 501. [CrossRef]
8. Zhao, Z.; Wang, B.; Chen, G. Sliding mode servo control of a large flexible solar cell wing driving device. *J. Vib. Shock.* **2020**, *39*, 211–218+288. (In Chinese) [CrossRef]

9. de Jesús Rubio, J.; Hernandez, M.A.; Rosas, F.J.; Orozco, E.; Balcazar, R.; Pacheco, J. Genetic high-gain controller to improve the position perturbation attenuation and compact high-gain controller to improve the velocity perturbation attenuation in inverted pendulums. *Neural Netw.* **2024**, *170*, 32–45. [CrossRef]
10. Qiu, J.; Wang, T.; Sun, K.; Rudas, I.J.; Gao, H. Disturbance Observer-Based Adaptive Fuzzy Control for Strict-Feedback Nonlinear Systems With Finite-Time Prescribed Performance. *IEEE Trans. Fuzzy Syst.* **2022**, *30*, 1175–1184. [CrossRef]
11. de Jesús Rubio, J.; Orozco, E.; Cordova, D.A.; Hernandez, M.A.; Rosas, F.J.; Pacheco, J. Observer-based differential evolution constrained control for safe reference tracking in robots. *Neural Netw.* **2024**, *175*, 106273. [CrossRef]
12. Rubio, J.d.J. Bat algorithm based control to decrease the control energy consumption and modified bat algorithm based control to increase the trajectory tracking accuracy in robots. *Neural Netw.* **2023**, *161*, 437–448. [CrossRef] [PubMed]
13. Chak, Y.-C.; Varatharajoo, R.; Assadian, N. Adaptive fuzzy Jacobian control of spacecraft combined attitude and Sun tracking system. *Aircr. Eng. Aerosp. Technol.* **2021**, *93*, 1–14. [CrossRef]
14. Guo, C.; Lu, D.; Zhang, M.; Zhang, Q.; Chen, C. Active control technology for flexible solar array disturbance suppression. *Aerosp. Sci. Technol.* **2020**, *106*, 106148. [CrossRef]
15. Cheng, J.; Zeng, Q.; Hu, G.; Zhang, J. The optimal composite fuzzy control for solar array drive assembly using PSO algorithm. In Proceedings of the 2016 35th Chinese Control Conference (CCC), Chengdu, China, 27–29 July 2016. [CrossRef]
16. Cheng, J.; Zhang, Q.; Hu, G.; Guo, C.; Zhang, M. T-S Fuzzy Composite Controller for High Stability SADA. *J. Astronaut.* **2016**, *37*, 307–315. (In Chinese)
17. Wang, Z.; Xiong, H. Research on ADRC based on speed loop control of permanent magnet synchronous motor. In Proceedings of the 2023 3rd International Conference on Electrical Engineering and Mechatronics Technology (ICEEMT), Nanjing, China, 21–23 July 2023. [CrossRef]
18. Gao, Z. Scaling and bandwidth-parameterization based controller tuning. In Proceedings of the 2003 American Control Conference, 2003, Denver, CO, USA, 4–6 June 2003. [CrossRef]
19. Kang, E.; Wu, B.; Yu, C. Research on permanent mgnet synchronous motor based on LADRC control. *Electr. Mach. Control* **2023**, *27*, 69–78. (In Chinese) [CrossRef]
20. Si, Z.; Liu, Y. High Accuracy and High Stability Attitude Control of a Satellite with a Rotation Solar Array. *J. Astronaut.* **2010**, *31*, 2697–2703. (In Chinese)
21. Li, X.; Xia, L.; Chen, Y.; Huang, S.; Gong, L.; Sun, T. A Comparative Study on Control Performance of LADRC and PI Controllers for Servo Applications. In Proceedings of the 2024 IEEE 10th International Power Electronics and Motion Control Conference (IPEMC2024-ECCE Asia), Chengdu, China, 17–20 May 2024. [CrossRef]
22. Sancio, R.; Pugliese, S.; Debbadi, K.; Liserre, M.; Brescia, E.; Cascella, G.L. Fuzzy Based Adaptive Linear Active Disturbance Rejection Control for an High speed PMSM. In Proceedings of the 2022 IEEE 1st Industrial Electronics Society Annual On-Line Conference (ONCON), Kharagpur, India, 9–11 December 2022. [CrossRef]
23. Lu, Z.; Bai, S.; Jiang, M.; Xu, Y.; Liu, F. Improved design of linear self-turbulent permanent magnet synchronous motor speed controller. *J. Electron. Measrement Instrum.* **2022**, *36*, 73–81. (In Chinese) [CrossRef]
24. Cheng, J.; Zhang, Q.; Hu, G.; Yu, G.; Lu, D. Friction Parameter Identification for High Stability SADA. *Aerosp. Control Appl.* **2016**, *42*, 14–19. (In Chinese)
25. Cheng, J.; Zhang, Q.; Hu, G.; Guo, C. The Control of High Stability SADA Based on a Composite Controller. *Comput. Simul.* **2016**, *33*, 81–85. (In Chinese)
26. Zhang, K.; Zhang, Q.; Cheng, J. Micro-Vibration Modeling of SADA and Friction Compensation for the Control of PMSM. *Aerosp. Control Appl.* **2015**, *41*, 33–38. (In Chinese) [CrossRef]
27. Wu, S.; Liang, S.; Zhou, M. Optimization of Speed Tracking Performance of LADRC for PMSM. In Proceedings of the 2nd International Conference on Electronic Information Engineering and Computer Technology, EIECT 2022, Yan'an, China, 28–30 October 2022. [CrossRef]
28. Si, Z.; Liu, Y.; Li, K. Research on Modeling and Driver Design of Solar Array DriveAssembly. *Aerosp. Control Appl.* **2010**, *36*, 13–19. (In Chinese)
29. Chen, C.; Ding, Y.; Wang, S.; Liu, J. High-precision control technoloogy and on-orbit verification of GF-7 satellite. *Chin. Space Sci. Technol.* **2020**, *40*, 34–41. (In Chinese) [CrossRef]
30. Zhao, Z.; Wang, B.; Qian, Z.; Chen, G. Solar Tracking Control of Flexible Solar Cell Wings of Space Station. *Aerosp. Shanghai (Chin. Engl.)* **2021**, *38*, 31–40. (In Chinese) [CrossRef]
31. Ding, Y.; Xiao, X. Control Strategies of Flexible Load Driven Directly by Permanent Magnet Synchronous Motor. *Trans. China Electrotech. Soc.* **2017**, *32*, 123–132. (In Chinese) [CrossRef]
32. Bu, F.; Xuan, F.; Yang, Z.; Gao, Y.; Pan, Z.; Degano, M.; Gerada, C. Rotor Position Tracking Control for Low Speed Operation of Direct-Drive PMSM Servo System. *IEEE/ASME Trans. Mechatron.* **2021**, *26*, 1129–1139. [CrossRef]
33. Yin, Y.; Liu, L.; Vazquez, S.; Xu, R.; Dong, Z.; Liu, J.; Leon, J.I.; Wu, L.; Franquelo, L.G. Disturbance and Uncertainty Attenuation for Speed Regulation of PMSM Servo System Using Adaptive Optimal Control Strategy. *IEEE Trans. Transp. Electrif.* **2023**, *9*, 3410–3420. [CrossRef]
34. Qu, Y.; Zhang, B.; Chu, H.; Yang, X.; Shen, H.; Zhang, J. Linear-Nonlinear Switching Active Disturbance Rejection Speed Controller for Permanent Magnet Synchronous Motors. *Sensors* **2022**, *22*, 9611. [CrossRef]

35. Hou, L.; Shen, H.; Li, Y.; Li, X. Nonlinear robust sliding mode control of permanent magnet synchronous motor speed regulation system. *Electr. Mach. Control.* **2020**, *24*, 143–152. (In Chinese) [CrossRef]
36. Xu, Q.; Fang, S.; Wan, P.; Wang, Y.; Huang, D. Low-Speed LADRC for Permanent Magnet Synchronous Motor With High-Pass Speed Compensator. *IEEE J. Emerg. Sel. Top. Power Electron.* **2023**, *11*, 6016–6027. [CrossRef]
37. Tanaka, R.; Toyota, M.; Fujimoto, T. LADRC Design Based on Disturbance Response Specification for the Second Order Plant. In Proceedings of the 2022 13th Asian Control Conference (ASCC), Jeju, Republic of Korea, 4–7 May 2022. [CrossRef]
38. Song, B.; Wang, R.; Xu, L. Design of PMSM Dual-Loop Control Systems Integrating LADRC and PI Controllers via an Improved PSO Algorithm. *Int. Trans. Electr. Energy Syst.* **2024**, *2024*, 9378284. (In Chinese) [CrossRef]
39. Zhu, S.; Wang, Y.; He, C.; Ling, Y.; Tao, L.; Zhou, X. Control of Wind Power Grid-connection Based on First-order LADRC and Its StabilityAnalysis. *Proc. CSU-EPSA* **2020**, *32*, 33–38. (In Chinese) [CrossRef]
40. Li, Y.; Ma, G.; Hui, X.; Zhu, M. High-stability Speed Control for Hydrodynamic Air Bearing Permanent Magnet Synchronous Motor. *Navig. Control* **2023**, *22*, 68–75. (In Chinese) [CrossRef]

Disclaimer/Publisher's Note: The statements, opinions and data contained in all publications are solely those of the individual author(s) and contributor(s) and not of MDPI and/or the editor(s). MDPI and/or the editor(s) disclaim responsibility for any injury to people or property resulting from any ideas, methods, instructions or products referred to in the content.